Drain Wells
(a.k.a. Dry Wells)

A "Deep" Subject

What About Drain Wells?

- What are Drain Wells?
- Where do Drain Wells work?
- County Approved Drain Well Detail
- Application process for drain well

What Are Drain Wells?

A drain vent for water, somewhat like a well or pit, serving to discharge the water of wet land.

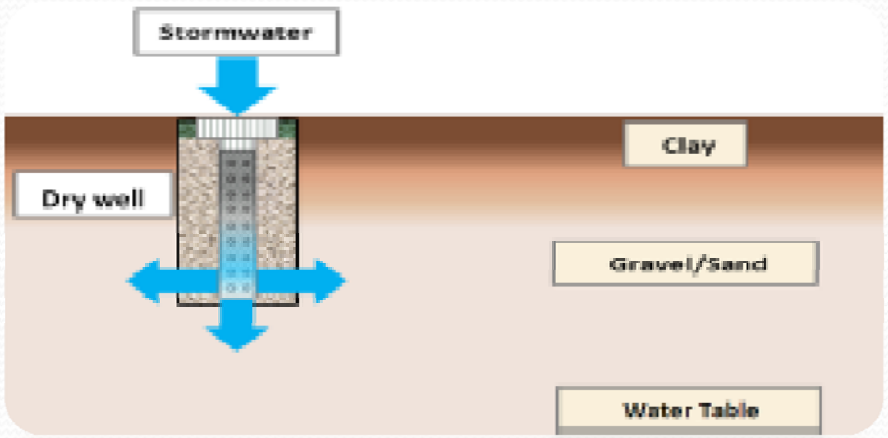

Dry well penetrates into permeable soils for more rapid infiltration

Drain Well Standard Detail (E-6)

DRAIN WELL DETAIL

NOT TO SCALE

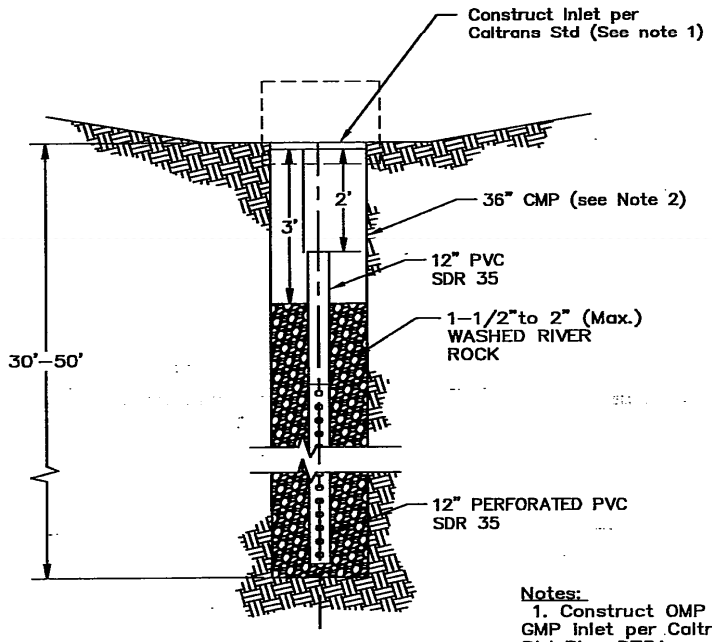

Notes:
1. Construct OMP or GMP Inlet per Caltrans Std Plan D75A.
2. CMP to be top 15'

VERIFY ACTUAL DEPTH AND LOCATION OF ALL EXISTING UTILITIES PRIOR TO CONSTRUCTION. CALL "UNDERGROUND SERVICE ALERT" (U.S.A.), 800-642-2444 OR 811 PRIOR TO TRENCHING, GRADING, EXCAVATION, DRILLING, PIPE PUSHING, ETC.

DRAWN BY J.G. DATE 09/10/2015	**COUNTY OF MADERA** **DRAIN WELL DETAIL STANDARD**	DRAWING NO. E-6

E:\Autocad Files\Madera County Standard Dwg Files\E Dwg\E-6 Drywell_Standard_9-8-15.dwg 9-10-15 12:17:55 PM jesus.guzman

Drain Well Inlet Details

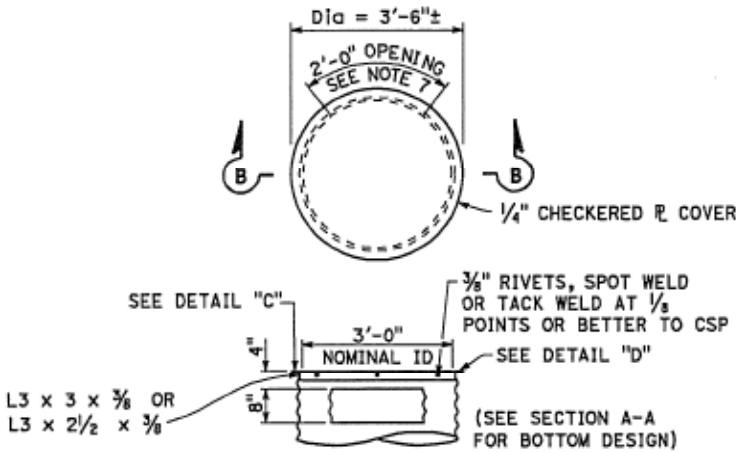

SECTION B-B

TYPE OMP or OMPI

Steel pipe inlet with side opening and steel cover (see note 6)

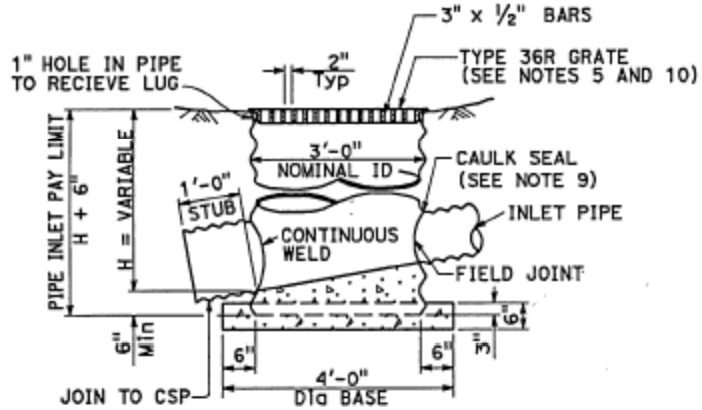

SECTION A-A

TYPE GMP

Steel pipe inlet with grate

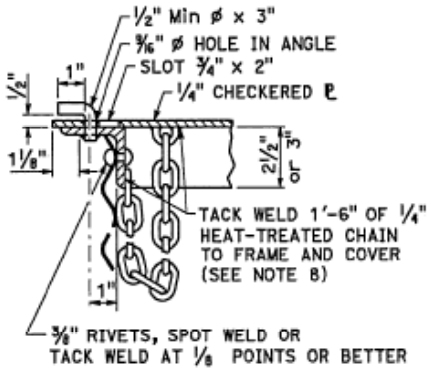

DETAIL "C"

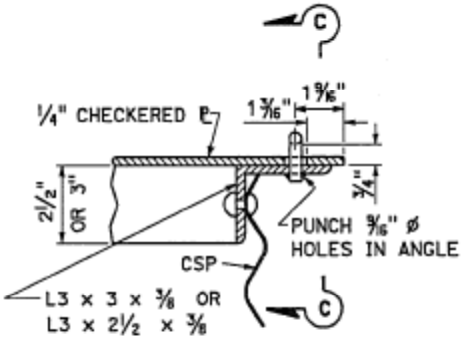

DETAIL "D"

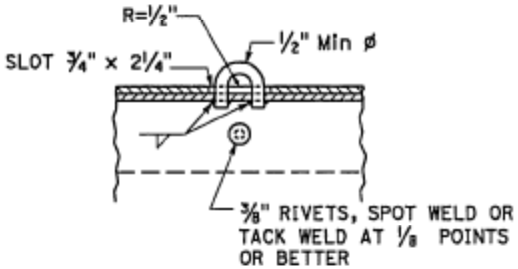

SECTION C-C

Drain Well Installation At MD-10A Dublin Plant

PVC - Perforated

Installation of Drain Well

Drain Wells on Avenue 9

Drain Well Application

-DRAIN WELL

COUNTY OF MADERA

COMMUNITY & ECONOMIC DEVELOPMENT

ENVIRONMENTAL HEALTH DIVISION

200 West 4th Street, Suite 3100, Madera, CA 93637

(559) 675-7823 FAX (559) 675-7919

envhealth@madera-county.com

FOR COUNTY USE ONLY

RECEIVED MCEHD DATE: _____

Applicant will receive permit by:

☐ Mail ☐ EH Pick-up ☐ BL Pick-up

☐ Email: _____

Paid: $ _____ Check #: _____

DRAIN WELL CONSTRUCTION APPLICATION

PROPERTY OWNER(S): _____ PHONE: _____

MAILING ADDRESS: _____

JOB ADDRESS: _____ APN: _____

CONTRACTOR'S NAME: _____ PHONE: _____

LICENSE TYPE(S): _____ LICENSE NUMBER: _____ EXPIRATION DATE: _____

Worker's Compensation Declaration

I hereby affirm under penalty of perjury one of the following declaration and that I am licensed under provisions of Chapter 9 (commencing with Section 7000) of Division 3 of the Business and Professions Code, and my license is in full force and effect. Madera County Business License # _____

☐ I have and will maintain a certificate of consent to self-insure for workers' compensation, issued by the Director of Industrial Relations as provided for by Section 3700 of the Labor Code, for the performance of the work for which this permit is issued.
Policy number: _____

☐ I have and will maintain workers' compensation insurance, as required by Section 3700 of the Labor Code, for the performance of the work for which this permit is issued. My workers' compensation insurance carrier and policy number are: Carrier: _____

Policy Number: _____ Expiration Date: _____

☐ I certify that, in the performance of the work for which this permit is issued, I shall not employ any person in any manner so as to become subject to the workers' compensation laws of California, and agree that, if I should become subject to the workers' compensation provisions of Section 3700 of the Labor Code, I shall forthwith comply with those provisions.

DRAIN WELL (S)

Drain Well(s): # _____

Diameter: 3 feet

Depth: _____ 30 ft. to 50 ft.

NO excavation shall extend within 10 feet of the water table.

Media type: 1 ½ - 2 inch Rock Filled

THIS APPLICATION MAY BE USED AS A JOB CARD TO CONSTRUCT IF THE FOLLOWING IS SIGNED BY AN REHS.

_____

SIGNATURE DATE

COMMENTS/CONDITIONS:

This permit is valid only for the property owner of the proposed drain well, and is non-transferable. Any other movement of soil on this parcel may be subject to grading permit requirements issued by Madera County Public Works Department (559) 675-7811.

1. Minimum 24 hour notice required for Final Inspection
2. Maintain all Madera County setbacks. (BACK PAGE)
3. Temporary job card must be placed on site during construction.
5. Unauthorized changes to the permit WILL RENDER IT VOID
6. If sandy soils or water is encountered during system installation, immediately call inspector for a re-evaluation.

**I declare under penalty of perjury under the laws of the State of California that he foregoing and attached information forms are true and correct. I hereby authorize representatives of this County to enter upon the above mentioned property for inspection. I agree to comply with all County ordinances and State laws relating to building construction.

_____

Signature Print Name Date

Plot Plan

APN: ____ -____ - ____

Madera County Plot Plan

Permit # ____-_____ (if issued by the county)

Show exact location &distances of proposed well or septic system from existing wells, road-right-of way, property lines, water courses, lakes, ponds & animal enclosures within 500 ft.

N

(Indicate North direction by arrow)

I declare that the foregoing and attached information forms are true and correct to the best of my knowledge.

Signature _____ Print Name _____Date: _____

Scale: _____= _____

Setback Requirements

Minimum Horizontal Distance in Clear Required From:	Building Sewer	Septic Tank	Disposal Field	Seepage Pit/ Drain Well
Buildings or structures[1]	5 ft (1.52 m)	5 ft (1.52 m)	8 ft (2.44 m)	8 ft (2.44 m)
Front property line[2]	25 ft (7.62 m)	25 ft (7.62 m)	25 ft (7.62 m)	25 ft (7.62 m)
Side property line[2]	25 ft (7.62 m) [10 ft (3.05 m)]	50 ft (15.3 m) [10 ft (3.05 m)]	50 ft (15.3 m) [10 ft (3.05 m)]	75 ft (22.9 m) [10 ft (3.05 m)]
Back property line[2]	25 ft (6.72 m) [20 ft (6.10 m)]	50 ft (15.3 m) [20 ft (6.10 m)]	50 ft (15.3 m) [20 ft (6.10 m)]	75 ft (22.9 m) [20 ft (6.10 m)]
Domestic well not serving a water system	50 ft (15.3 m)	100 ft (30.5 m)	100 ft (30.5 m)	150 ft (45.7 m)
Public or domestic well serving a water system	100 ft (30.5 m)	150 ft (45.7 m)	150 ft (45.7 m)	150 ft (45.7 m)
Flowing stream[3]	50 ft (15.3 m)	100 ft (30.5 m)	100 ft (30.5 m)	150 ft (45.7 m)
Drainage course of ephemeral stream[9]	25 ft (7.62 m)	50 ft (15.3 m)	50 ft (15.3 m)	50 ft (15.3 m)
Unlined pond, lake or reservoir	50 ft (15.3 m)	100 ft (30.5 m)	200 ft (61 m)	200 ft (61 m)
Storm water flood retention basin that retains water for 48 hours or less	25 ft (7.62 m)	100 ft (30.5 m)	100 ft (30.5 m)	100 ft (30.5 m)
Large trees[8]	-	10 ft (3.05 m)	10 ft (3.05 m)	10 ft (3.05 m)
Seepage pit	-	5 ft (1.52 m)	[4,7]	20 ft (6.10 m)[7]
Disposal field	-	-	[4,7]	5 ft (1.52 m)
On site domestic water service line	1 ft (341 mm)	5 ft (1.52 m)	5 ft (1.52 m)	5 ft (1.52 m)
Distribution valve	-	-	5 ft (1.52 m)	5 ft (1.52 m)
Pressure public water main	10 ft (3.05 m)	10 ft (3.05 m)	10 ft (3.05 m)	10 ft (3.05 m)
Downslope cut banks or major slope changes[5]	10 ft (3.05 m)	10 ft (3.05 m)	[6]	[6]